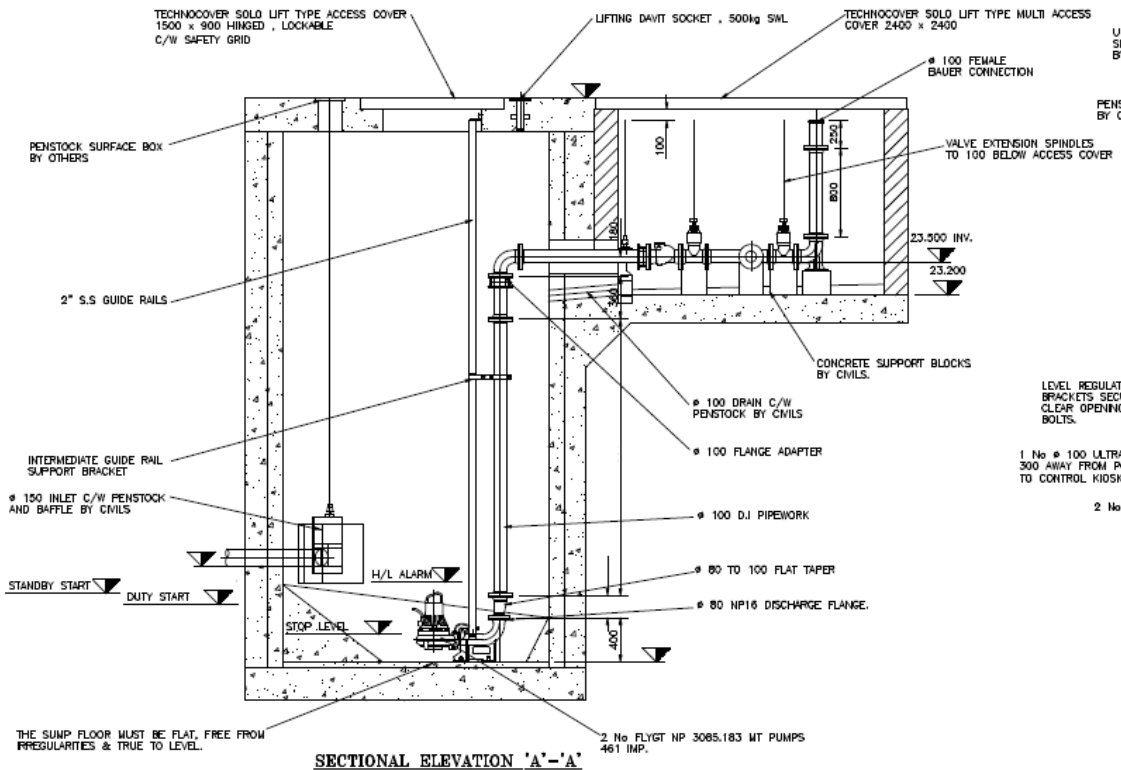

SECTIONAL ELEVATION 'A'–'A'

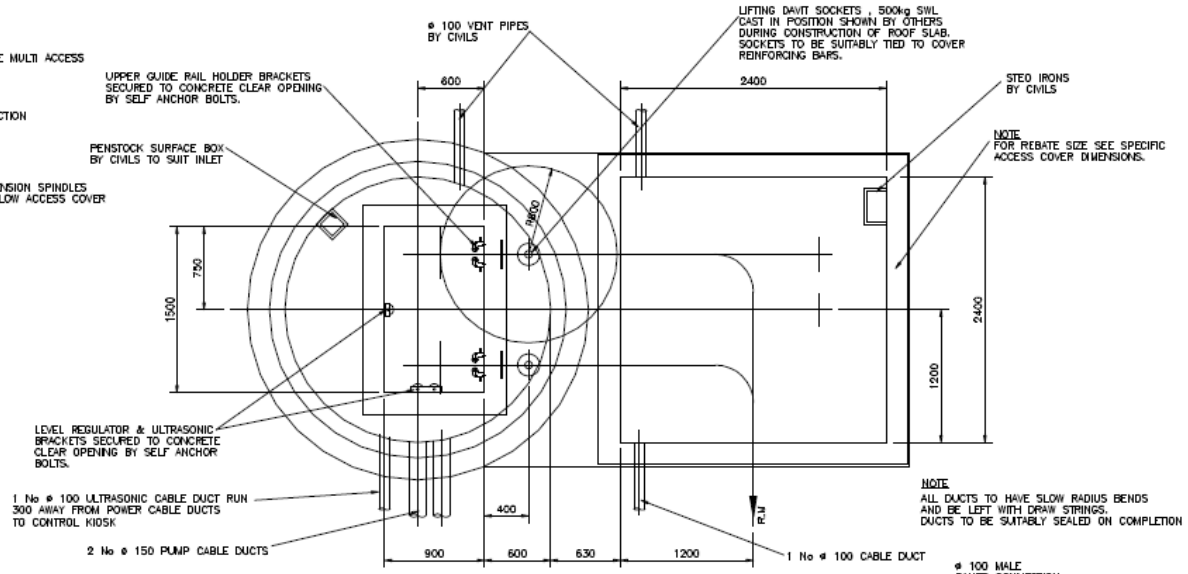

PLAN OF COVER SLAB

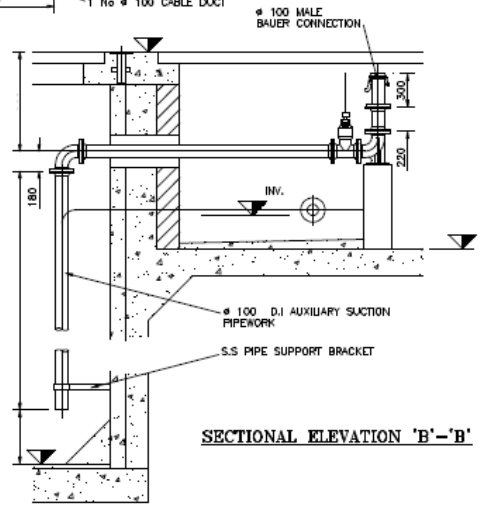

SECTIONAL ELEVATION 'B'–'B'

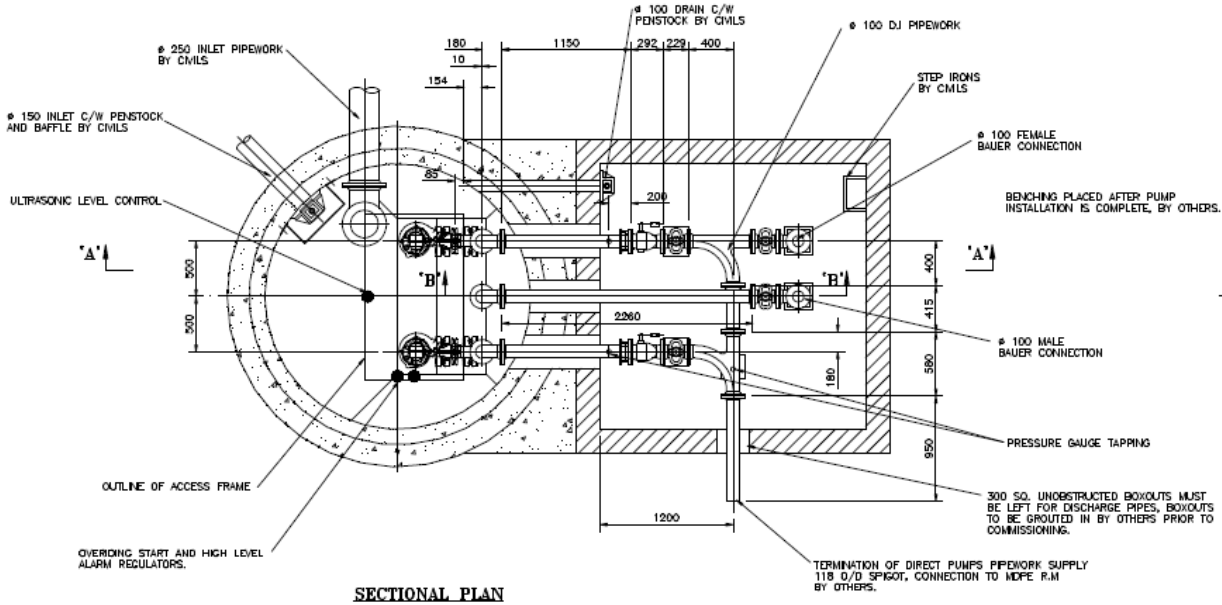

SECTIONAL PLAN

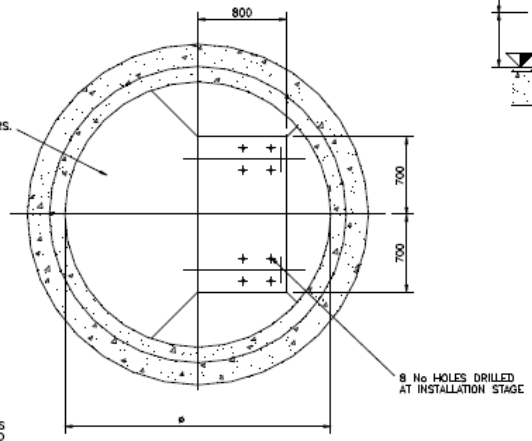

PLAN OF SUMP FLOOR